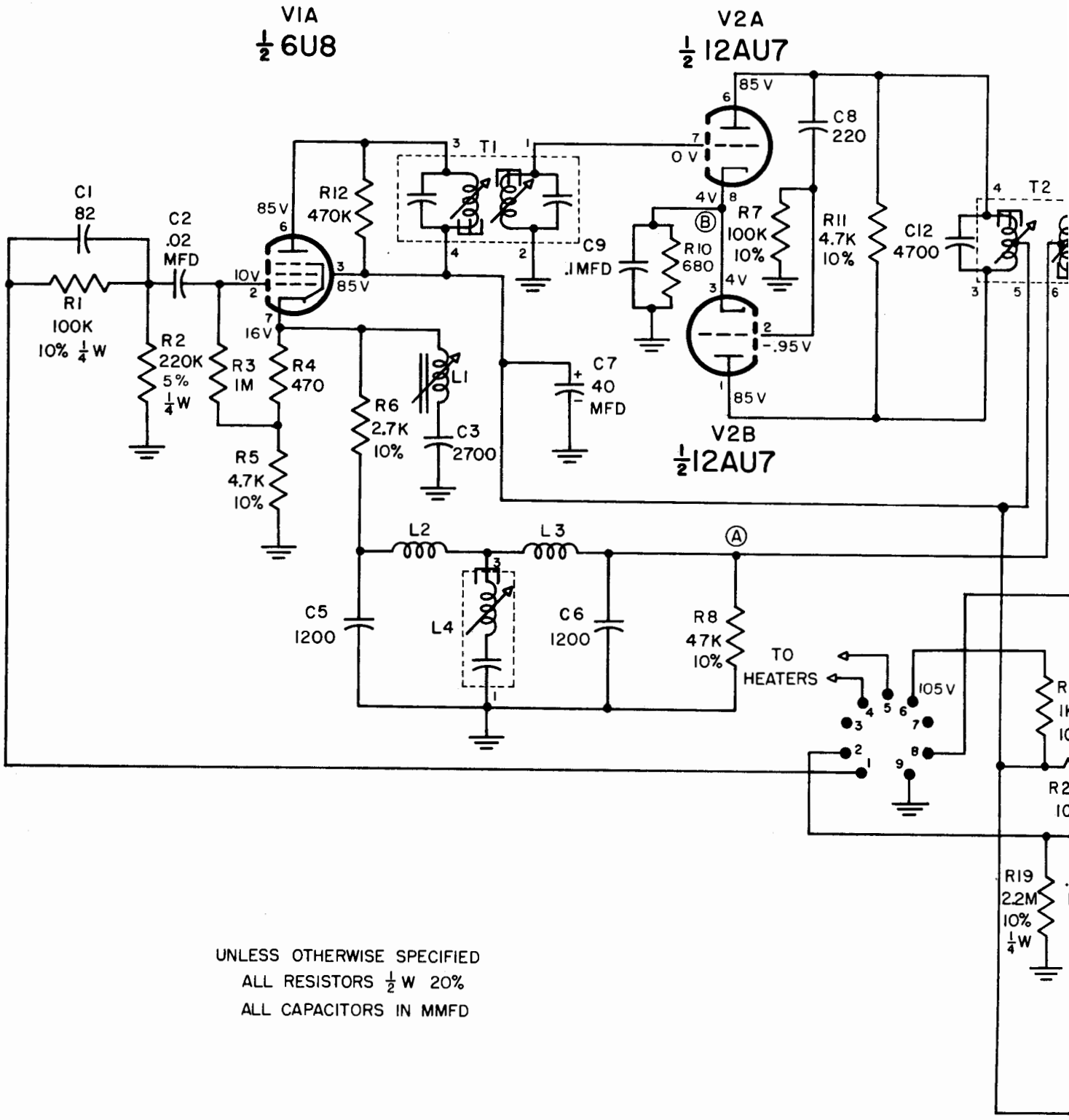

UNLESS OTHERWISE SPECIFIED
ALL RESISTORS ½ W 20%
ALL CAPACITORS IN MMFD

REV	C N	REVISION	DATE	BY	CHKD	APPD
A						
B						
C						

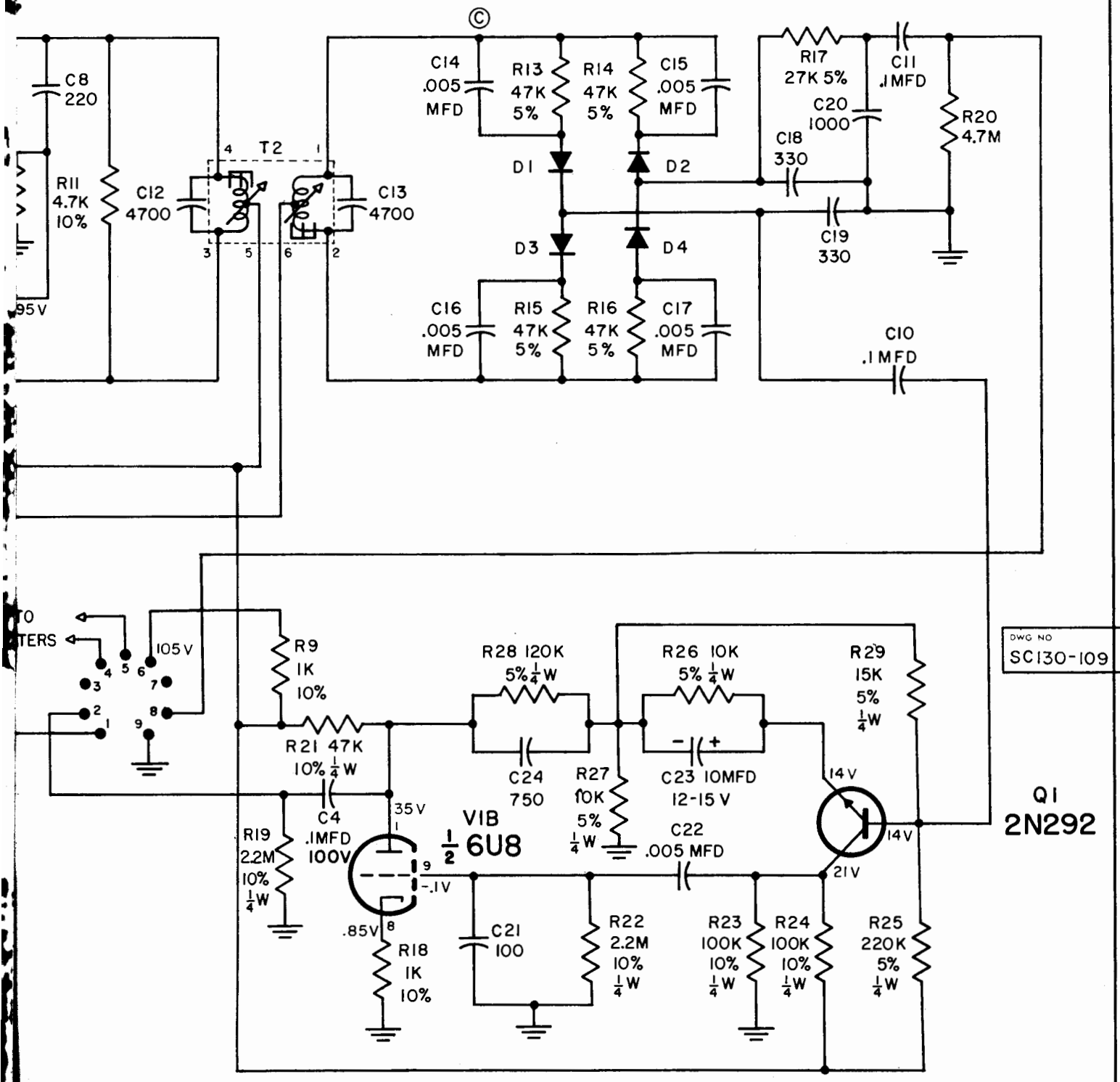

DWG NO	REV
SC130-109	

MATERIAL	TITLE	PART NO.
	SCHEMATIC MA 5	
FINISH	McIntosh LABORATORY INC. 2 Chambers St. Binghamton N. Y.	USED ON
TOLERANCES – Unless otherwise specified. ± ½ Angles. ± 1/64 Fractions. ± .005 Decimals	SCALE / DRN BY A. D. C. / DATE 1·5·62 / CHKD / APPD	DWG NO. SC130-109 / REV A